GUJARAT COUNCIL ON SCIENCE AND TECHNOLOGY
Department of Science and Technology, Government of Gujarat

Technical Report for Level-2 Proof of Concept (PoC) Stage for ROBOFEST-GUJARAT 3.0

Submarine or Underwater Robot

Project Title – The OCEANUS ROV

Exploring the Unseen - Unleash the Power of Discovery

By

Bhushan Vasant Nanaware

Ravindra Singh

A Sai Srija

Sri Saravana Vishnu JSB

Mentor: Dr. Manoj Kumar Shukla

Team **STREAiMERS** - LPU, INDIA

LOVELY PROFESSIONAL UNIVERSITY

Table of Contents

Introduction *1*

Project Overview 2

Robofest Objectives 2

Complete and exhaustive description of all the logical steps in the working of Robot *3*

Description of Robot 3

Electronics Description 5

Features 7

Complete and exhaustive listing of all the Hardware / Component / Equipment *9*

(Electronics and Mechanical) *9*

Electronics Component 11

Electronics Modules 18

Electronics Components Used for Fabrication 19

Tools, Equipments Used 21

Mechanical Components 23

Mechanical Modules 25

Fabrication Component 26

Electromechanical Component 27

Complete and exhaustive listing of all the software used in Robo-Making *29*

Software Used 29

Additional Features in Actual Robo-Making 31

Any Other description not mentioned above 33

Deliverables achieved in terms of final objectives for the prototype *35*

Functional Modules 35

Photos of Robo-Making 36

Videos (1GB Limit) 40

Introduction

We are Team STREAiMERS, hailing from the prestigious Lovely Professional University. Our team is a dedicated collective of undergraduate students deeply immersed in the realm of underwater robotics, with a particular emphasis on Remotely Operated Underwater Vehicles (ROUVs). We share a collective passion for exploring the depths of underwater technology and pushing the boundaries of what's possible in this exciting field.

About OCEANUS - The Underwater ROV

The Oceanus is a compact, agile, and modularly designed Remotely Operated Vehicle (ROV) built for diverse underwater operations. Conceived with an emphasis on adaptability, its design allows for the integration of additional modules in the future, providing flexibility for expanding its capabilities as required.

The Oceanus's body is constructed from PLA (Polylactic Acid) and PETG (Polyethylene Terephthalate Glycol), selected for its strength-to-weight ratio, corrosion resistance, and durability under various marine conditions. In contrast, the main hull, which houses all essential electrical components and sensors, is made of acrylic. This material choice provides an excellent balance between structural integrity and transparency for internal component monitoring.

One of Oceanus's defining features is its propulsion system. With six thrusters, the ROV has six degrees of freedom movement, which includes surge (forward/backward), sway (left/right), heave (up/down), roll (tilting side to side), pitch (tilting forward/backward), and yaw (turning left/right). This feature provides superior maneuverability, allowing Oceanus to navigate complex underwater environments with ease.

The ROV's control system utilizes a radio controller, enabling reliable and precise commands from the operator. A noteworthy feature of Oceanus is its advanced communication system, which employs a floating buoy connected to the ROV via a tether. This buoy houses a radio receiver and a Wi-Fi transmitter module, allowing wireless control and data transmission between the operator and the ROV.

Oceanus is equipped with a 12-megapixel camera to provide clear underwater vision and live streaming capabilities to the base station via Wi-Fi. This feature allows the operator to view real-time footage, enhancing navigational control and task execution. Additionally, Oceanus includes a barcode reader, enabling it to identify and interact with barcoded objects underwater, which may be beneficial for various exploration and recovery missions.

In summary, the Oceanus ROV is a robust, versatile, and technologically advanced solution for a wide range of underwater applications. With its modular design, comprehensive suite of sensors, and superior maneuverability, it represents a significant advancement in ROV technology, capable of meeting the demands of both current and future underwater missions.

Project Overview

We are thrilled to introduce our latest creation - Oceanus, a Remotely Operated Vehicle (ROV) specifically designed for the esteemed Robofest Gujarat 3.0 underwater robot challenge. Oceanus is the culmination of countless hours of collaborative effort, meticulous planning, and rigorous testing, all aimed at creating an ROV that can navigate the rigorous demands of the competition.

In preparation for Robofest Gujarat 3.0, we have optimized Oceanus's structure to be as minimalistic as possible without compromising its performance or functionality.

In essence, Oceanus's design combines practicality and performance. It reflects our commitment to producing a high-performing ROV that is beneficial in tight and crunch spaces underwater, offering adaptability to the diverse and challenging conditions of the Robofest Gujarat 3.0 underwater robot challenge. With Oceanus, Team STREAiMERS is ready to make a significant impact and demonstrate our underwater robotics prowess.

Robofest Objectives

The Oceanus Remotely Operated Vehicle (ROV) project is an ambitious initiative by Team STREAiMERS aimed at pushing the boundaries of underwater exploration and intervention. The following are the objectives of the project,

Primary Objective

Our primary goal is to develop an underwater robot with the capability to be fully submerged and operate at a minimum depth of 2 meters. The ROV should have the ability to move with three degrees of freedom, including the capacity to navigate up and down, front and back, and left to right. This fundamental capability is crucial for the efficient execution of underwater operations.

Grand Finale Objectives

For the grand finale, the objective is to create a wirelessly controlled and battery-operated underwater robot. This advanced ROV should be capable of remaining below a depth of 4 feet for at least 5 minutes. A critical feature of this robot will be its onboard barcode reader, enabling it to identify and map the relative positions of five barcoded objects at the base of the pool. This capability will showcase the ROV's potential for precise underwater object identification and localization.

Complete and exhaustive description of all the logical steps in the working of Robot

Description of Robot

The Oceanus Remotely Operated Vehicle (ROV) is a technologically advanced underwater robot designed to perform various tasks in challenging aquatic environments. It incorporates a range of components, systems, and logical steps to ensure its effective operation. The following is a comprehensive description of the logical steps involved in the working of the Oceanus ROV:

1. **Power On and Initialization:** The first step is to power on the ROV. This involves activating the main electrical systems and initializing the onboard microcontrollers and sensors. The ROV goes through a self-check process to ensure all systems are functioning correctly.
2. **Buoy Connection:** The ROV is connected to a floating buoy via a tether. This buoy serves as a communication hub, housing a radio receiver and a Wi-Fi transmitter module. The ROV establishes a wireless connection with the operator through this buoy.
3. **Operator Control:** The operator uses a radio controller to send commands to the ROV. These commands are transmitted wirelessly from the operator to the ROV through the floating buoy. The operator can control the ROV's movement, camera, and other functionalities using the radio controller.
4. **Movement Control:** The operator can maneuver the ROV in six degrees of freedom using the radio controller. This includes controlling the ROV's surge (forward/backward), sway (left/right), heave (up/down), roll (tilting side to side), pitch (tilting forward/backward), and yaw (turning left/right). The radio controller relays the operator's commands to the ROV, which adjusts its thrusters accordingly to achieve the desired movement.
5. **Camera and Vision:** The Oceanus ROV is equipped with a 12-megapixel camera for underwater vision. The camera provides clear and real-time footage of the underwater environment. The operator can view this footage on the base station, enhancing situational awareness and facilitating precise maneuvering.
6. **Wireless Communication:** The communication system of the ROV allows for wireless transmission of data between the operator and the ROV. The radio signals are sent from the operator's radio controller to the floating buoy, which relays the signals to the ROV. This two-way communication enables the operator to receive live video feed, sensor data, and other information from the ROV, while also sending commands and instructions.
7. **Barcode Reading:** The Oceanus ROV is equipped with a barcode reader, which enables it to identify and interact with barcoded objects underwater. The barcode reader scans the barcodes and sends the information to the operator, allowing for precise object identification and localization.

8. **Task Execution:** Based on the operator's commands, the ROV performs various tasks underwater. These tasks can include underwater exploration, data collection, object retrieval, or any other activities required for the specific mission. The ROV utilizes its maneuverability, camera, and sensors to execute these tasks accurately and efficiently.
9. **Monitoring and Feedback:** Throughout the operation, the operator receives real-time feedback from the ROV. This includes sensor data, camera footage, and status updates. The operator can monitor the ROV's position, battery levels, and other vital information to ensure safe and effective operation.
10. **Power Off and Shutdown:** Once the mission is completed or when the ROV requires shutdown, the operator initiates the power-off sequence. The ROV's electrical systems are safely powered down, and all components enter a standby or off state. The ROV is then disconnected from the buoy and prepared for maintenance or storage.

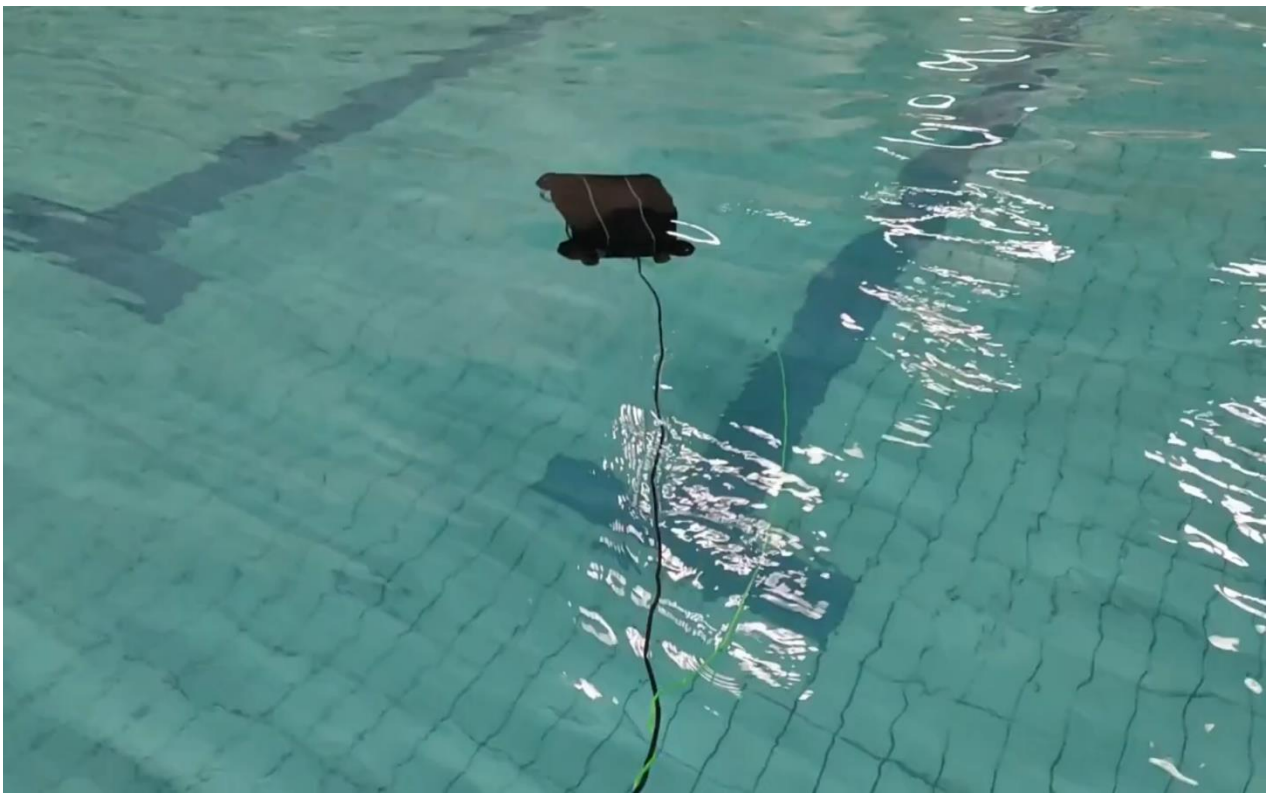

The logical steps outlined above provide a comprehensive overview of the working process of the Oceanus ROV. These steps ensure seamless communication, precise control, efficient task execution, and effective monitoring, enabling the ROV to perform various underwater

Electronics Description

The Oceanus Remotely Operated Vehicle (ROV) incorporates a range of electronic components and systems to enable its operation and facilitate communication, control, and data processing. The following is a description of the key electronics used in the Oceanus ROV:

1. **Pixhawk Flight Controller:** The Pixhawk flight controller is a high-performance autopilot system commonly used in unmanned aerial vehicles (UAVs) but also suitable for ROVs. It serves as the central processing unit, responsible for controlling and coordinating the ROV's various subsystems. The Pixhawk is equipped with a microcontroller, sensors (e.g., gyroscope, accelerometer), and interfaces for communication with other devices and peripherals.
2. **Bidirectional Electronic Speed Controllers (ESCs):** The ROV's thrusters, responsible for propulsion and maneuverability, are connected to bidirectional ESCs. These ESCs regulate the speed and direction of each thruster based on the signals received from the Pixhawk flight controller. Bidirectional ESCs enable the ROV to move in both forward and reverse directions, providing precise control over the thrust output.
3. **Power Distribution Board:** The power distribution board serves as a central hub for distributing power from the ROV's power source (e.g., batteries) to the various electronic components and subsystems. It includes multiple power connectors and terminals to connect and distribute power to the Pixhawk flight controller, ESCs, sensors, and other electrical devices.
4. **Connecting Terminals:** Connecting terminals, such as connectors, plugs, and wires, are used to establish electrical connections between different components in the ROV's electronic system. These terminals provide secure and reliable connections, ensuring efficient power distribution and signal transmission throughout the ROV.
5. **Microcontrollers**: The ROV is equipped with microcontrollers, such as Raspberry Pi, which serve as the central processing units. These microcontrollers are responsible for executing commands, controlling the ROV's various subsystems, and interfacing with sensors and actuators.
6. **Camera and Vision System**: The Oceanus ROV incorporates a high-resolution camera for capturing underwater footage and live video streaming. The camera is connected to the microcontroller, enabling the transmission of video data to the base station for real-time monitoring and control.
7. **Communication System**: The ROV utilizes a communication system to establish a wireless link between the operator and the vehicle. A radio receiver and Wi-Fi transmitter module are integrated into a floating buoy connected to the ROV via a tether. The buoy receives wireless commands from the operator and relays them to the ROV, enabling control and data transmission between the two.

8. **Sensors:** The Oceanus ROV incorporates various sensors to gather data about the underwater environment and the ROV's internal state. These sensors can include depth sensors, temperature sensors, pressure sensors, and IMUs (Inertial Measurement Units) for measuring orientation and acceleration. The data from these sensors is processed by the microcontroller for monitoring and decision-making purposes.
9. **Barcode Reader**: The ROV features an onboard barcode reader for underwater object identification and localization. The barcode reader is connected to the microcontroller, which receives the barcode information and relays it to the operator for real-time feedback and interaction.
10. **Data Processing and Control Software**: The microcontrollers are programmed with software that facilitates data processing, control algorithms, and communication protocols. This software enables the interpretation of sensor data, execution of control commands, and integration of different subsystems for seamless operation.
11. **User Interface**: The operator interacts with the ROV through a user interface, which can be a radio controller or a computer-based interface. The interface allows the operator to send commands, receive feedback, and monitor the ROV's status and sensor data.
12. **Safety Systems**: The ROV incorporates safety systems, such as emergency stop mechanisms or fail-safe protocols, to ensure safe operation and protect the ROV in case of critical situations or communication failures.

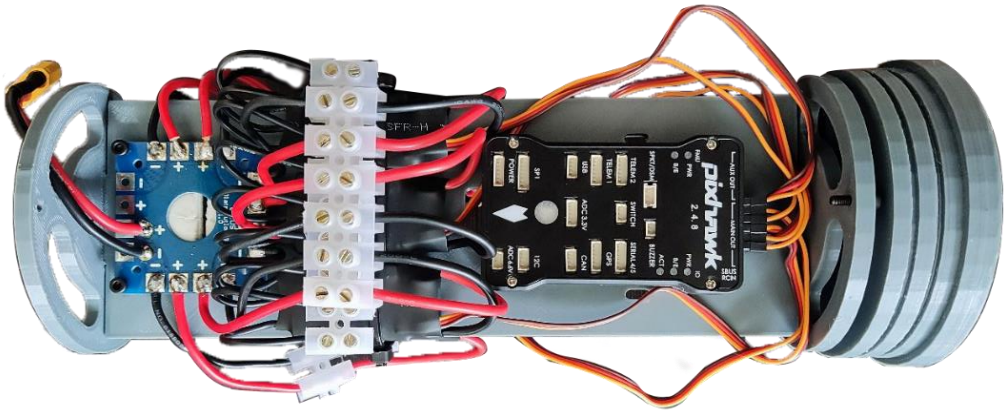

These electronic components and systems work in harmony to enable the Oceanus ROV's functionality, control, communication, and data processing. They form the backbone of the ROV's electronic architecture, facilitating its performance in underwater environments and providing a reliable platform for various underwater missions.

Features

Features of the Oceanus ROV:

1. **Modular Design:** The Oceanus ROV features a modular design, allowing for easy integration of additional modules and components. This modularity provides flexibility and scalability, enabling customization and expansion of the ROV's capabilities as needed for different missions or future upgrades.
2. **Superior Maneuverability:** With its six thrusters providing six degrees of freedom, the Oceanus ROV offers exceptional maneuverability underwater. It can move forward/backward, left/right, up/down, tilt side to side, tilt forward/backward, and turn left/right with precision. This maneuverability enables the ROV to navigate complex underwater environments and perform intricate tasks effectively.
3. **Robust Construction:** The body of the Oceanus ROV is constructed using PLA (Polylactic Acid) and PETG (Polyethylene Terephthalate Glycol) materials, chosen for their strength-to-weight ratio, corrosion resistance, and durability in marine conditions. The main hull, which houses essential electrical components and sensors, is made of acrylic, providing structural integrity and transparency for monitoring internal components.
4. **Wireless Control and Communication:** The ROV utilizes a floating buoy connected to a tether for wireless control and communication. The buoy houses a radio receiver and a Wi-Fi transmitter module, enabling wireless transmission of commands and data between the operator and the ROV. This wireless control system enhances convenience, range, and flexibility during operation.
5. **12-Megapixel Camera and Live Streaming**: Equipped with a high-resolution 12-megapixel camera, the Oceanus ROV provides clear underwater vision and live streaming capabilities. The camera captures real-time footage, allowing the operator to view the underwater environment and monitor the ROV's surroundings during operation. Live streaming enhances situational awareness and facilitates precise maneuvering.
6. **Barcode Reader:** The inclusion of a barcode reader in the Oceanus ROV enables underwater object identification and interaction. The ROV can scan barcoded objects, providing valuable information to the operator for tasks such as exploration, recovery missions, or precise positioning in underwater environments.
7. **Versatile Application:** The Oceanus ROV is designed for a wide range of underwater applications. It can be used for scientific research, underwater exploration, environmental monitoring, inspection of underwater structures, search and rescue operations, and various other tasks that require precise control and data collection in aquatic environments.
8. **User-Friendly Interface:** The ROV incorporates a user-friendly interface for the operator to control and monitor its operations. Whether through a radio controller or a computer-based interface, the operator can easily send commands, receive real-time feedback, and access essential information such as sensor data, camera feed, and ROV status.

9. **Expandable Capabilities:** With its modular design and adaptable architecture, the Oceanus ROV has the potential for future expansions and upgrades. Additional modules, sensors, or functionalities can be integrated into the ROV's framework to enhance its capabilities and accommodate evolving mission requirements.

The Oceanus ROV's features combine advanced technology, maneuverability, durability, and adaptability to provide a robust and versatile underwater robotic solution. Its comprehensive suite of sensors, wireless control, camera capabilities, and modular design make it a reliable tool for various underwater applications and missions.

Complete and exhaustive listing of all the Hardware / Component / Equipment (Electronics and Mechanical)

Electronics:

1. Pixhawk Flight Controller
2. Brushless DC (BLDC) Motors
3. 30 Amp Bidirectional Electronic Speed Controllers (ESCs)
4. Power Distribution Board
5. Connecting Terminals (Wire Connectors, Terminal Blocks, etc.)
6. High-Resolution 12-Megapixel Camera
7. Radio Receiver
8. Wi-Fi Transmitter Module
9. Barcode Reader
10. Temperature Sensors
11. Pressure Sensors

Mechanical:

1. Body Frame constructed from PLA (Polylactic Acid) and PETG (Polyethylene Terephthalate Glycol)
2. Acrylic Hull for housing essential electrical components and sensors
3. Six Thrusters for six degrees of freedom movement (surge, sway, heave, roll, pitch, yaw)
4. Propellers for Thrusters
5. Tether for connecting the ROV to the floating buoy
6. Floating Buoy for wireless control and communication
7. Cables and Wires for electrical connections
8. Mounting Brackets and Hardware for securing components
9. Buoyancy Materials (e.g., Foam or iron rods) for maintaining desired buoyancy
10. Sealing Materials (e.g., O-rings, Silicone) for waterproofing critical areas

User Interface and Control:

1. Radio Controller (for manual control)
2. Computer-based Interface (for monitoring and control)
3. Monitor or Display for viewing live video streaming and ROV status
4. Input Devices (e.g., Joystick, Keyboard, Mouse) for commanding and interacting with the ROV

Miscellaneous:

1. Tools (e.g., Screwdrivers, Wrenches) for assembly, maintenance, and repairs
2. Safety Equipment (e.g., Gloves, Safety Glasses) for handling the ROV and components
3. Documentation (e.g., Manuals, User Guides) for reference and troubleshooting

It's important to note that the above list includes the key hardware, components, and equipment commonly found in an ROV like the Oceanus. Depending on specific customizations and requirements, additional or specialized hardware may be integrated into the ROV's design.

Electronics Component

1. **Pixhawk Flight Controller:** The Pixhawk flight controller serves as the brain of the ROV, responsible for processing sensor data, executing flight algorithms, and controlling the vehicle's various subsystems. It is an open-source autopilot system known for its reliability and advanced capabilities.

2. **Microcontrollers**: Microcontrollers, such as Raspberry Pi, may be used for additional control or data processing tasks. They can be utilized for custom functionalities, interfacing with sensors, or executing specific algorithms.

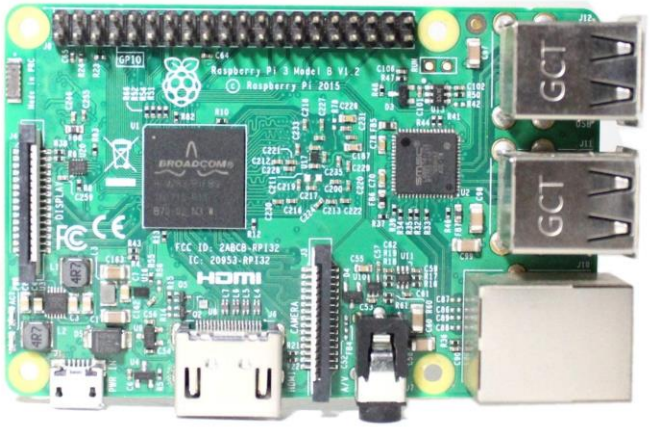

3. **Sensors:** Sensors play a vital role in providing data about the ROV's environment and its own state. Depth sensors measure the water depth, temperature sensors monitor water temperature, pressure sensors measure water pressure, and IMUs (Inertial Measurement Units) provide data on the ROV's orientation and acceleration. These sensors enable the ROV to navigate and operate effectively underwater.

4. **Electronic Speed Controllers (ESCs):** The ESCs are crucial components that regulate the power and direction of the ROV's thrusters. They receive commands from the flight controller and control the speed and rotation of the motors, enabling precise maneuvering and control of the ROV's movement.

5. **Brushless DC (BLDC) Motors:** The Oceanus ROV prototype utilizes Brushless DC (BLDC) motors as part of its propulsion system. BLDC motors offer several advantages, including higher efficiency, improved torque-to-weight ratio, and enhanced reliability compared to traditional brushed DC motors. These motors provide the necessary thrust for the ROV's movement, allowing for smooth and efficient navigation in underwater environments.

6. **Power Distribution Board:** The power distribution board manages the distribution of electrical power within the ROV. It receives power from the main power source, such as batteries, and distributes it to various components, including the flight controller, ESCs, sensors, and other subsystems. The power distribution board ensures stable power supply and protects the components from power-related issues.

7. **Radio Receiver:** The radio receiver receives wireless commands from the operator, allowing remote control of the ROV. It communicates with the flight controller, relaying the operator's instructions and enabling real-time control and maneuvering of the ROV.
   Wi-Fi Transmitter Module: The Wi-Fi transmitter module enables wireless communication between the ROV and a base station or operator interface. It allows for data transmission, video streaming, and remote control commands over a Wi-Fi network.

8. **Camera Module:** The camera module, typically a high-resolution camera, captures video footage and images of the underwater environment. It provides real-time video streaming to the base station, enabling the operator to have visual feedback, enhance situational awareness, and aid in navigation and task execution.

9. **Barcode Reader Module:** The barcode reader module is an additional feature of the ROV that enables underwater object identification and interaction. It scans barcoded objects and provides data or triggers specific actions based on the information obtained from the barcodes.

10. **LEDs (Light Emitting Diodes):** LEDs are used as visual indicators to display the status or feedback of various systems within the ROV. They can be used to indicate power status, operational modes, or warnings, enhancing the operator's situational awareness.

11. **Batteries or Power Banks:** Batteries or power banks provide the necessary electrical power to operate the ROV. They are typically rechargeable and selected based on the required capacity and voltage to support the ROV's operation during missions.

12. **Connectors:** Connectors, such as wire connectors or terminal blocks, are used to establish secure electrical connections between various components. They ensure proper signal and power transmission, enabling reliable communication and power distribution throughout the ROV.

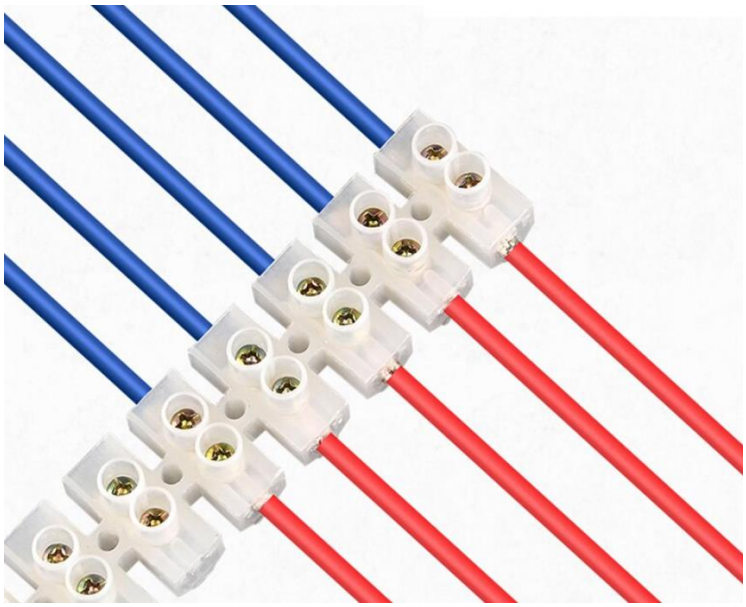

13. **Cables and Wiring:** Cables and wiring are essential for interconnecting the various electronic components and subsystems within the ROV. They provide the necessary electrical connections, ensuring signal integrity and power distribution throughout the system.

14. **Enclosures or Cases:** Enclosures or cases are used to protect the electronics from water ingress or physical damage. They provide a secure and watertight housing for sensitive components, ensuring the reliability and durability of the ROV's electronics in underwater environments.

This comprehensive list covers a wide range of electronics components that are typically employed in the construction and operation of the Oceanus ROV. The selection and integration of specific components may vary based on the desired functionality, performance, and customization requirements of the ROV.

Electronics Modules

Here is a list of electronics modules used in the Oceanus ROV:

1. **Pixhawk Flight Controller Module:** The Pixhawk flight controller module is a compact and powerful module that serves as the central control unit for the ROV. It includes an array of sensors, microcontrollers, and communication interfaces to manage the vehicle's navigation, stabilization, and control.
2. **Wireless Communication Module:** The wireless communication module enables wireless connectivity between the ROV and external devices, such as a base station or operator interface. It may utilize Wi-Fi, Bluetooth, or other wireless protocols to facilitate real-time data transmission, remote control, and video streaming.
3. **Camera Module:** The camera module captures high-resolution images and videos of the underwater environment. It may include features such as autofocus, image stabilization, and low-light performance. The camera module is typically connected to the flight controller or a separate video processing module for live streaming or recording.
4. **Barcode Reader Module:** The barcode reader module is an additional module that can be integrated into the ROV for underwater object identification and interaction. It utilizes image recognition algorithms and barcode scanning technology to identify and interpret barcoded objects, providing valuable information for specific tasks or missions.
5. **Power Management Module:** The power management module ensures efficient power distribution and regulation within the ROV. It includes voltage regulators, battery monitoring circuits, and protection mechanisms to prevent overcharging, overcurrent, and voltage fluctuations. The module may also incorporate charging circuits for rechargeable batteries.
6. **Navigation Lights Module:** Navigation lights are used to enhance the visibility of the ROV in low-light conditions or underwater environments. The navigation lights module includes LED lights that provide different colors and flashing patterns to indicate the ROV's position and status.

These electronics modules are essential components of the Oceanus ROV, enabling control, sensing, communication, and data processing capabilities. The specific selection and integration of modules may vary based on the desired functionality and requirements of the ROV project.

Electronics Components Used for Fabrication

When fabricating the electronics for the Oceanus ROV, you will require various components. Here is a list of common electronics components used for fabrication:

1. **Heat Shrink Tubes**: Heat shrink tubes are a type of tubing made from polymer materials that shrink in size when heat is applied. These tubes are commonly used in electronics fabrication to insulate and protect electrical connections. They provide a secure and professional-looking finish by sealing and covering exposed wires, preventing short circuits, and protecting against moisture, dust, and other contaminants. Heat shrink tubes are available in various sizes and colors to accommodate different wire diameters and coding requirements.
2. **Soldering Iron**: A soldering iron is a handheld tool used in electronics fabrication for soldering electrical components and creating secure connections. It consists of a heated metal tip that melts solder, a metal alloy with a low melting point, to join two or more conductive materials together. The soldering iron provides the necessary heat to melt the solder and create a strong bond between the components. Soldering is essential for assembling and connecting wires, circuit boards, and electronic components, ensuring reliable electrical conductivity and proper functionality.
3. **Material selection**: Choosing materials that are durable, lightweight, and resistant to corrosion and environmental conditions. Materials used for robot enclosures include acrylic cylinder and PLA plastics.
4. **Design**: The enclosure design should consider the overall dimensions of the robot, the placement of electronic components, and any specific requirements for access, ventilation, or cable routing.
5. **Manufacturing process:** Depending on the complexity of the design and the chosen material, different manufacturing processes can be used. These includes 3D printing, cutting and grinding.
6. **Sealing and protection**: The enclosure should be designed to protect the electronic components from dust, moisture, and other potential hazards. Proper sealing techniques, such as gaskets, o-rings, or silicone seals, should be employed to ensure environmental protection.
7. **Accessibility and maintenance:** Consider the need for easy access to the internal components for maintenance or repairs. Incorporate features like removable panels or access points to facilitate these tasks.
8. **Testing and validation**: Once the enclosure is fabricated, it should undergo rigorous testing to ensure its functionality, durability, and compliance with any relevant standards or regulations.
9. **Microcontrollers:** Microcontrollers are programmable integrated circuits that serve as the brains of the ROV's electronic system. They control various functions, process sensor data, and execute program instructions.
10. **Switches:** Switches are used to control the flow of current in a circuit. They can be mechanical switches or solid-state switches such as MOSFETs or relays.

11. **Connectors:** Connectors are used for electrical connections between different components or subsystems. They provide a secure and reliable interface for power, signals, and communication lines.
12. **Wires and Cables:** Wires and cables are used to connect components and subsystems within the ROV. They transmit power, signals, and data between different parts of the electronic system.
13. **Sensors:** Sensors detect and measure physical quantities such as temperature, pressure, depth, or orientation. They provide essential input for controlling the ROV and monitoring the environment.
14. **LEDs (Light-Emitting Diodes):** LEDs are used for visual indicators, status lights, and illumination purposes. They come in different colors and can be used to enhance visibility in low-light conditions.
15. **Switching Power Supplies:** Switching power supplies convert the input voltage to a regulated output voltage with high efficiency. They are used to power various components and subsystems in the ROV.
16. **Battery Packs:** Battery packs provide portable and rechargeable power for the ROV. They can be lithium-ion (Li-ion), nickel-metal hydride (NiMH), or other suitable battery chemistries.
17. **Relays:** Relays are electromechanical switches used to control high-power circuits or isolate electrical signals. They are used for switching power to motors, actuators, or other high-current devices.
18. **Heat Sinks:** Heat sinks are used to dissipate heat generated by high-power components such as motor controllers or power transistors. They help keep the temperature within acceptable limits.

These components are the building blocks of the electronics system in the Oceanus ROV. Their selection and integration depend on the specific requirements, functionality, and design considerations of the ROV project.

Tools, Equipments Used

During the fabrication and assembly of the Oceanus ROV, various tools and equipment are utilized to ensure accurate construction and efficient workflow. Here is a list of commonly used tools and equipment:

1. **Soldering Iron:** A soldering iron is used for soldering electronic components onto circuit boards, creating secure electrical connections.
2. **Desoldering Pump:** A desoldering pump, also known as a solder sucker, is used to remove excess solder and correct soldering mistakes.
3. **Wire Cutters:** Wire cutters are used to cut wires, leads, and component legs to the desired length during assembly.
4. **Wire Strippers:** Wire strippers are used to remove insulation from wires and create clean, exposed wire ends for soldering or connecting.
5. **Needle-Nose Pliers:** Needle-nose pliers are handy for gripping, bending, and manipulating small electronic components and wires.
6. **Tweezers:** Tweezers are used for precise handling and placement of small components during assembly, ensuring accurate positioning.
7. **Multimeter:** A multimeter is a versatile tool used to measure voltage, current, resistance, and continuity. It helps troubleshoot and test the functionality of electronic circuits.
8. **Heat Gun**: Used to shrink heat shrink tubing and provide heat for certain electrical connections.
9. **Electrical Tape**: Used for insulating and protecting electrical connections from moisture and damage.
10. **Crimping Tool:** A crimping tool is used to create secure and reliable crimped connections between wires and connectors, such as terminal pins or connectors.
11. **Power Supply:** A power supply provides the necessary electrical power to the ROV's electronic components and subsystems during testing and operation.
12. **Screwdrivers and Allen Wrenches:** Screwdrivers and Allen wrenches of various sizes are used to tighten or loosen screws and bolts during assembly and maintenance.
13. **Drill and Bits:** A drill is used to create holes in the ROV's chassis or mounting surfaces for component installation or cable routing.
14. **Safety Equipment:** Safety equipment such as safety glasses, gloves, and anti-static wrist straps should be used to protect against potential hazards and electrostatic discharge (ESD) during the assembly process.
15. **Storage and Organization Solutions:** Storage boxes, trays, and labels are helpful for organizing and storing electronic components, tools, and small parts to maintain an efficient workspace.
16. **Zip Ties**: These are flexible plastic ties that can be used for bundling and securing wires, cables, and components. They are commonly used in cable management and securing parts in place. They provide a quick and easy way to organize and tidy up the wiring and ensure a clean and professional-looking installation.

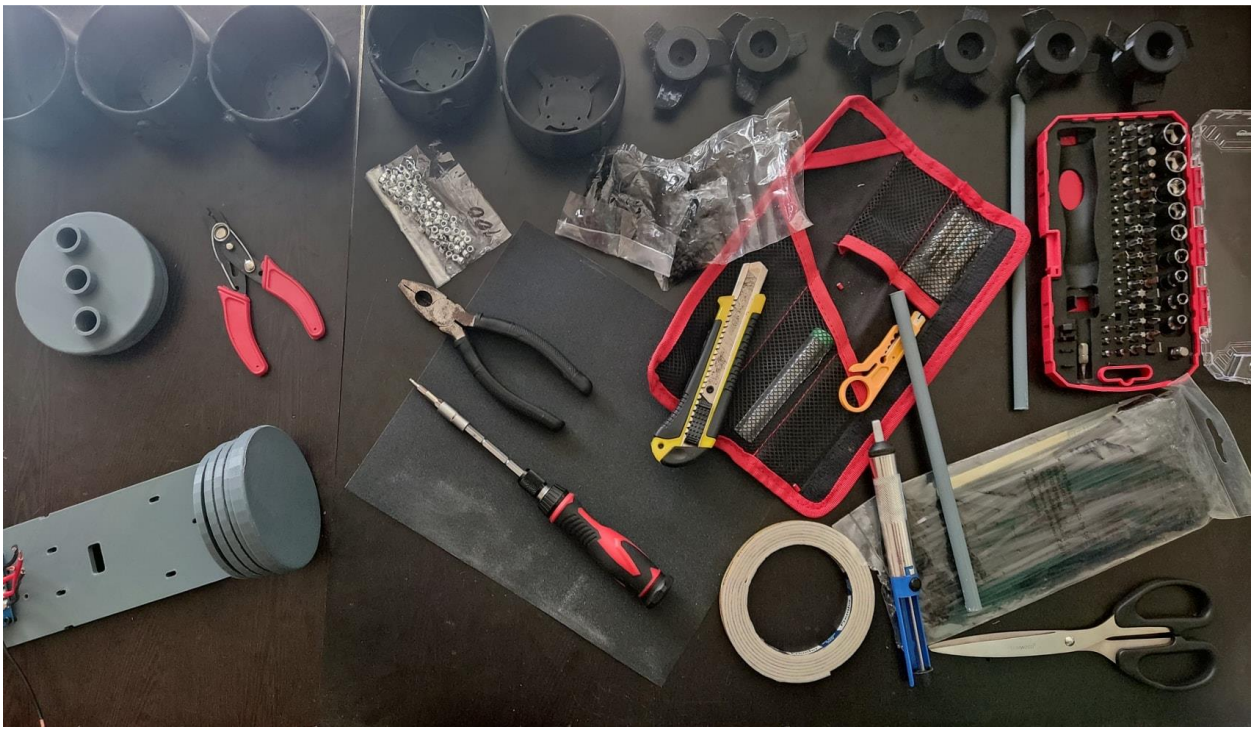

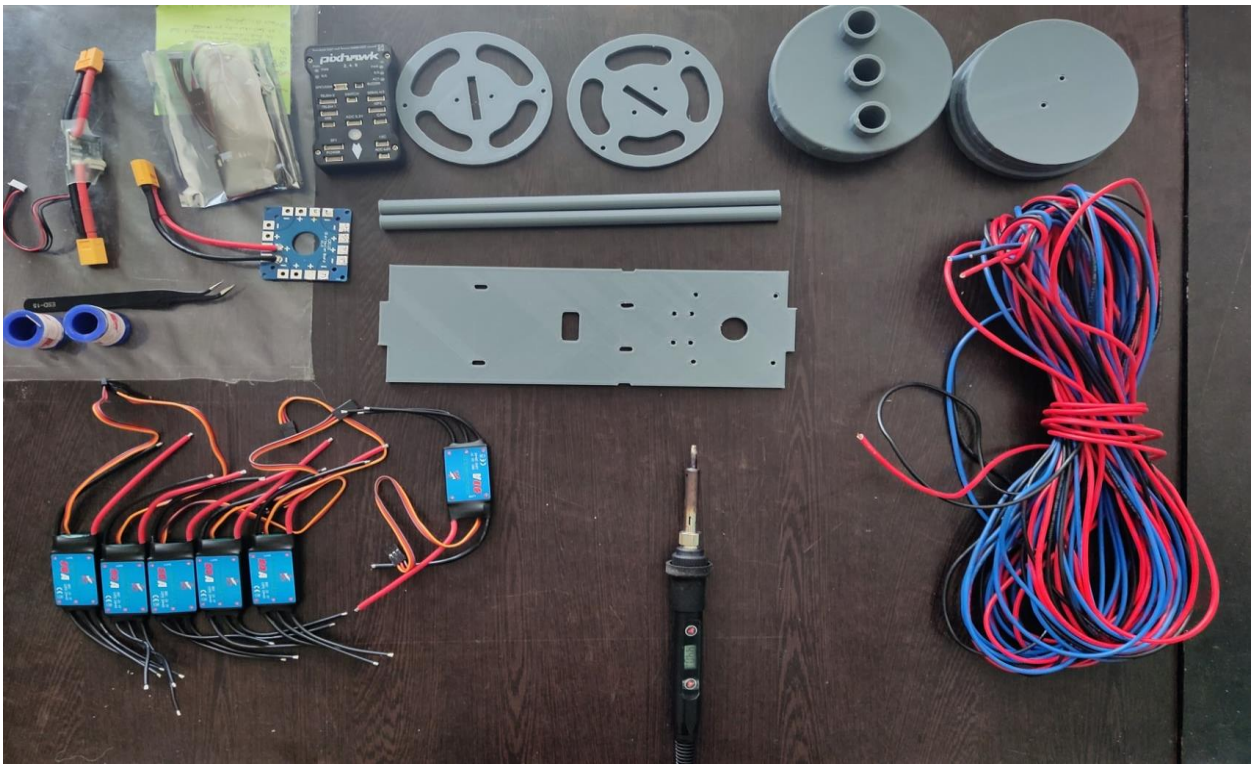

These tools and equipment facilitate the fabrication and assembly of the Oceanus ROV, ensuring accuracy, reliability, and efficient construction processes.

Mechanical Components

When it comes to the mechanical components used in the fabrication of the Oceanus ROV, several parts and assemblies are involved. Here is a list of common mechanical components used:

1. **Frame/Chassis:** The frame or chassis serves as the structural backbone of the ROV, providing support and housing for the various components. It is typically made of sturdy materials such as aluminum, stainless steel, or carbon fiber.
2. **Thrusters:** Thrusters are used to provide propulsion and maneuverability to the ROV. They generate thrust by rotating propellers or impellers and are typically electrically powered.
3. **Propellers:** Propellers are responsible for generating thrust by creating a pressure difference as they spin. They are attached to the thrusters and come in different sizes and configurations depending on the desired performance.
4. **Ballast System:** The ballast system allows the ROV to control its buoyancy by adjusting the amount of water it displaces. This is crucial for maintaining stability and depth control during underwater operations.
5. **Camera Housing:** The camera housing is a waterproof enclosure that protects the camera used for capturing underwater images and videos. It ensures that the camera remains safe and functional even in challenging marine environments.
6. **Lights:** Lights are essential for illuminating the underwater environment and enhancing visibility. They are typically mounted on the ROV's body or camera housing to provide adequate lighting for navigation and inspection tasks.
7. **Cables and Tethers:** Cables and tethers are used to transmit power, data, and signals between different components of the ROV and the control station on the surface. They are designed to be durable, waterproof, and capable of withstanding underwater conditions.
8. **Sealing and Gaskets:** Sealing components such as O-rings, gaskets, and waterproof connectors are used to ensure watertight integrity at critical joints and interfaces of the ROV. They prevent water ingress and protect sensitive electronics from damage.
9. **Mounting Hardware:** Mounting hardware includes screws, bolts, nuts, brackets, and clamps used to securely fasten components to the frame or chassis of the ROV. They ensure stability and prevent vibrations or loosening during operation.
10. **Buoyancy Modules:** Buoyancy modules are attached to the ROV to offset its weight and provide neutral buoyancy in water. They can be foam-filled containers or inflatable bags that help maintain the desired depth and stability.
11. **Sensors:** Mechanical sensors such as depth sensors, temperature sensors, and pressure sensors are used to gather data about the underwater environment. They provide valuable information for navigation, control, and monitoring purposes.
12. **Power Distribution System:** The power distribution system includes components such as connectors, wiring harnesses, and circuit breakers that distribute electrical power from the batteries or power source to different subsystems and components of the ROV.

13. **Control Surfaces:** Control surfaces, such as fins or rudders, are used to control the ROV's stability, direction, and maneuverability. They can be adjustable to optimize performance under different operating conditions.

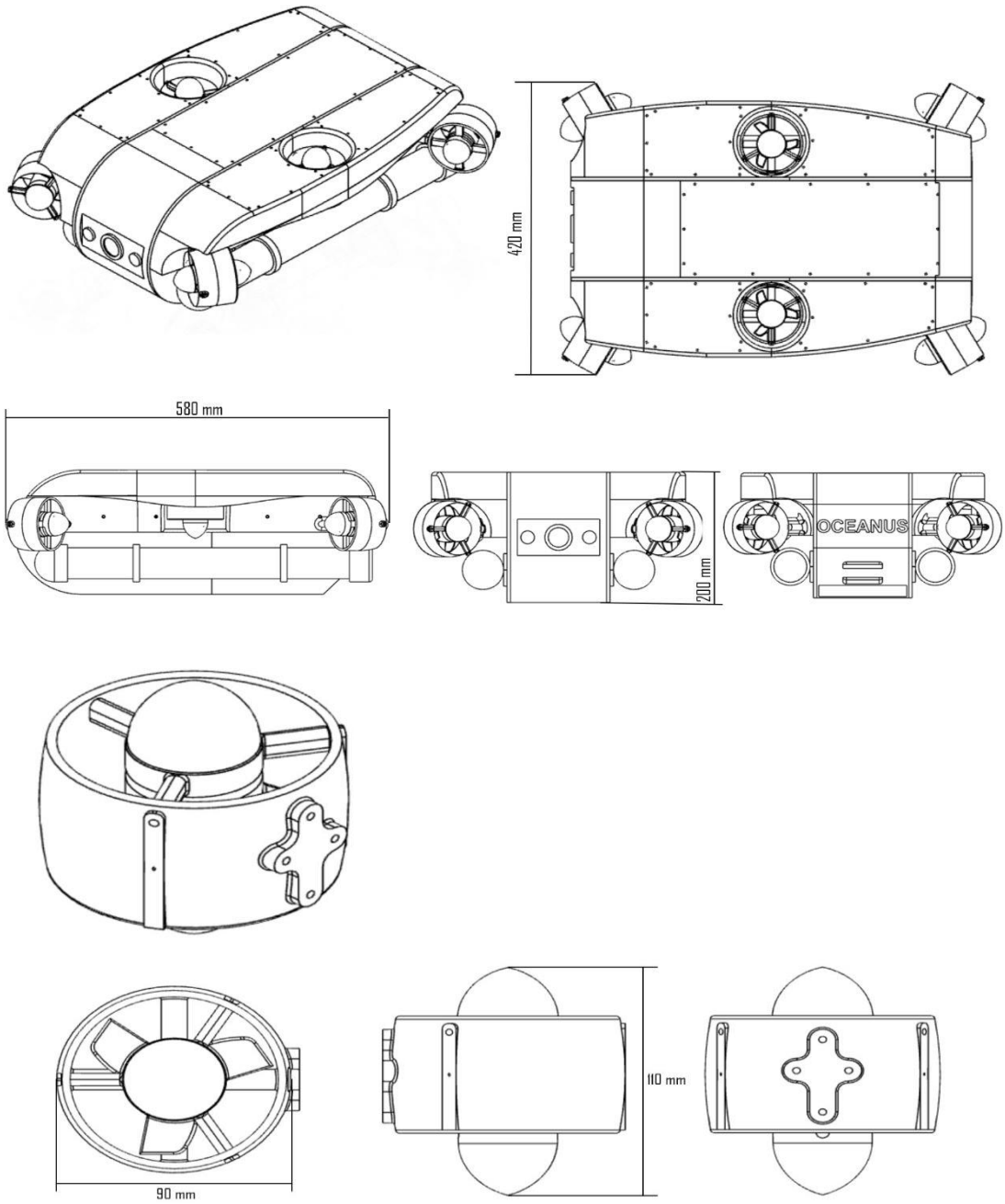

These mechanical components are crucial for the functionality, maneuverability, and reliability of the Oceanus ROV. The selection and integration of these components depend on the specific requirements, performance goals, and design considerations of the ROV project.

Mechanical Modules

When it comes to the mechanical modules used in the fabrication of the Oceanus ROV, several key modules are involved to ensure its proper functioning and performance. Here are some important mechanical modules commonly used:

1. **Propulsion Module:** The propulsion module consists of the thrusters, propellers, and associated components responsible for generating thrust and enabling the ROV to move in different directions underwater. It includes the motor, propeller housing, and mounting brackets.
2. **Frame/Chassis Module:** The frame or chassis module serves as the structural framework of the ROV, providing support, stability, and protection for the internal components. It is typically designed to be rigid, lightweight, and resistant to water corrosion.
3. **Buoyancy Control Module:** The buoyancy control module helps regulate the buoyancy of the ROV to achieve neutral buoyancy or adjust its depth underwater. It may include buoyancy chambers, adjustable ballast tanks, or inflatable bladders.
4. **Camera Module:** The camera module houses the camera and associated components used for capturing underwater images and videos. It includes a waterproof housing, lens, mounting brackets, and connections for transmitting the camera feed.
5. **Lighting Module:** The lighting module consists of the lights or LED arrays mounted on the ROV to provide illumination in dark or murky underwater environments
6. **Power Management Module:** The power management module includes components such as batteries, power distribution boards, voltage regulators, and connectors. It manages the power supply, distribution, and regulation to various subsystems and components of the ROV.
7. **Sensor Module:** The sensor module integrates various sensors such as depth sensors, pressure sensors, temperature sensors, and imaging sensors. These sensors gather data about the underwater environment and provide important feedback for navigation, control, and monitoring.
8. **Communication Module:** The communication module enables the ROV to establish communication with the surface control station or other external devices. It may include antennas, transceivers, cables, and connectors for wireless or wired data transmission.
9. **Control System Module:** The control system module encompasses the electronics, microcontrollers, and software responsible for controlling and operating the ROV. It includes the control board, motor controllers, sensors, and interfaces for user input and feedback.
10. **Safety Module:** The safety module includes components and mechanisms designed to enhance the safety of the ROV and prevent potential hazards. This may include emergency cut-off switches, protective covers, and fail-safe mechanisms.

These mechanical modules work together to provide the Oceanus ROV with the necessary propulsion, manipulation, control, sensing, and safety capabilities for its underwater operations. The selection and integration of these modules depend on the specific requirements, performance objectives, and design considerations of the ROV project.

Fabrication Component

When it comes to the fabrication of the Oceanus ROV, various components are involved in constructing its physical structure and ensuring its functionality. Here are some key fabrication components commonly used:

1. **Structural Materials:** The structural materials form the main body and framework of the ROV. Common materials used include aluminum, stainless steel, carbon fiber, or reinforced plastics.
2. **Fasteners:** Fasteners such as screws, bolts, nuts, and washers are used to securely join different components of the ROV together.
3. **Adhesives:** Adhesives play a crucial role in bonding various components and materials together. Epoxy adhesives or marine-grade adhesive sealants are commonly used for waterproofing and creating strong, permanent bonds.
4. **Waterproof Enclosures:** Waterproof enclosures are used to protect sensitive electronic components from water damage. These enclosures are typically made of waterproof plastic or aluminum and feature sealing mechanisms such as O-rings or gaskets to prevent water ingress.
5. **Cable Management Components:** Cable management components such as cable glands, cable ties, and conduit are used to organize and secure the electrical cables and wiring within the ROV.
6. **Sealing Materials:** Sealing materials such as O-rings, gaskets, and waterproof connectors are used to create watertight seals at various points within the ROV.
7. **Mounting Brackets and Plates:** Mounting brackets and plates are used to securely attach components to the ROV's structure.
8. **Waterproof Cable Connectors:** Waterproof cable connectors are used to establish electrical connections between different components while maintaining a waterproof seal.
9. **Waterproofing Solutions:** Waterproofing solutions such as silicone sealants or conformal coatings are applied to electronic components and circuit boards to protect them from moisture and corrosion.
10. **Cutting and Shaping Tools:** Cutting and shaping tools such as saws, drills, files, and routers are used to modify and shape the structural materials and other components to fit the desired specifications. They help create precise cuts, holes, and shapes for proper integration.
11. **Surface Treatments:** Surface treatments such as sanding, polishing, or painting may be applied to the ROV's external surfaces to improve aesthetics, corrosion resistance, and hydrodynamics.

These fabrication components play a vital role in constructing the Oceanus ROV's physical structure and ensuring its reliability, functionality, and durability underwater. The selection and utilization of these components depend on the specific design requirements, materials, and fabrication techniques employed during the construction process.

Electromechanical Component

Electromechanical components are essential in the construction of the Oceanus ROV, as they involve the integration of both electrical and mechanical elements. These components enable the transfer of electrical signals to mechanical motion or vice versa. Here are some key electromechanical components commonly used:

1. **Motors:** Motors are electromechanical devices that convert electrical energy into mechanical motion. In the case of the Oceanus ROV, various types of motors may be employed, such as DC motors or brushless DC motors. They are used for propulsion, controlling the movement of thrusters, and driving mechanical systems like manipulator arms.
2. **Servo Motors:** Servo motors are specialized motors used for precise control of angular motion. They contain built-in feedback mechanisms that allow for accurate positioning. Servo motors can be utilized in the ROV for controlling the movement of mechanical components, such as manipulator arms or camera tilt and pan mechanisms.
3. **Relays:** Relays are electromechanical switches that allow the control of high-power electrical circuits using low-power signals. They can be used in the ROV to control the activation or deactivation of various components, such as lights, motors, or solenoid valves.
4. **Pressure Sensors:** Pressure sensors are used to measure fluid pressure. In the case of the ROV, pressure sensors can be utilized to monitor the water pressure at different depths, providing valuable data for navigation, depth control, or monitoring system integrity.
5. **Temperature Sensors:** Temperature sensors are employed to measure the temperature of the surrounding environment or specific components. They can be utilized in the ROV to monitor the temperature of internal electronics or to provide environmental temperature data.
6. **Switches and Buttons:** Switches and buttons are simple electromechanical components used for manual control or system activation. They can be integrated into the ROV's control panel or user interface to provide manual control over various functions or system states.
7. **Connectors and Terminals:** Connectors and terminals are electromechanical components used for making electrical connections between different components or subsystems. They ensure secure and reliable electrical connections while allowing for easy disconnection and reconnection during assembly or maintenance.

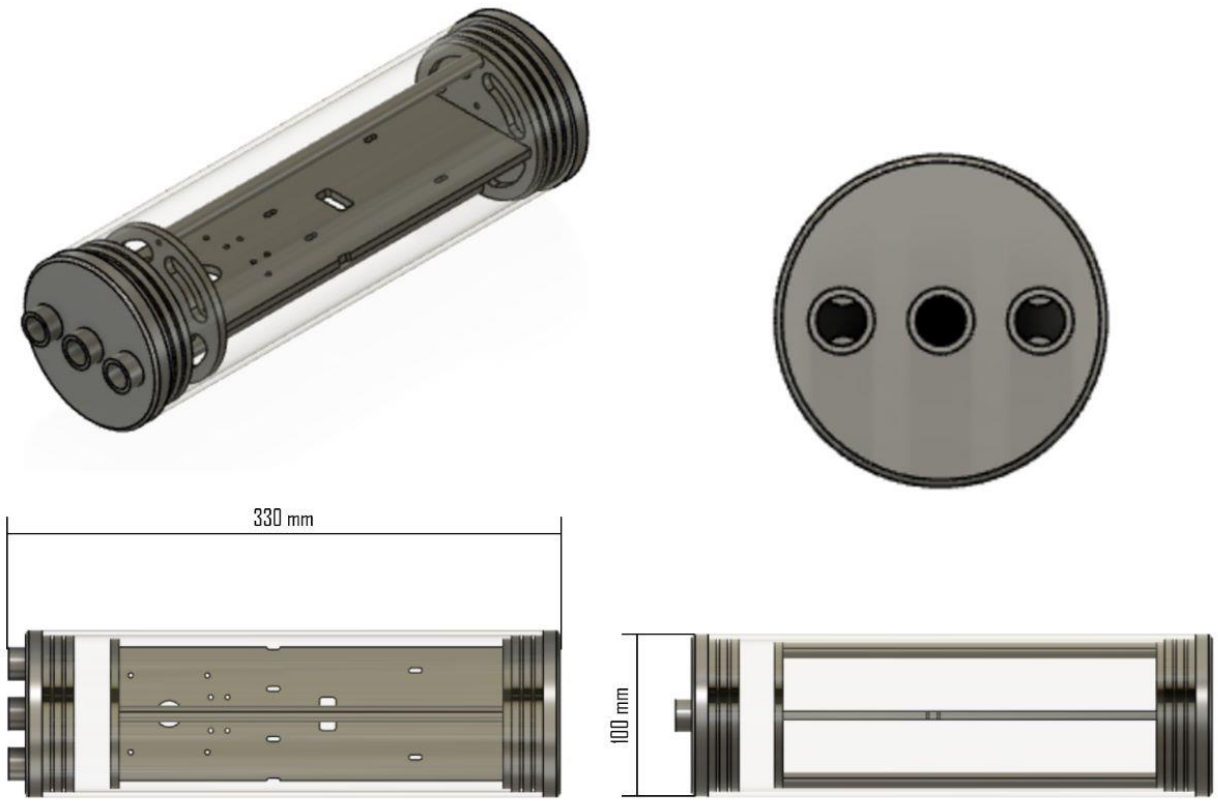

These electromechanical components play a crucial role in the functionality and control of various mechanical and electrical systems within the Oceanus ROV. Their integration and proper utilization are key factors in ensuring the smooth operation and performance of the underwater vehicle.

Complete and exhaustive listing of all the software used in Robo-Making

Software Used

In the process of robomaking, various software tools and platforms are used to design, program, simulate, and control the robot. Here is a list of some commonly used software in robomaking:

1. **CAD Software:** Computer-Aided Design (CAD) software is used for designing the mechanical components and structures of the robot. Popular CAD software includes Fusion 360, and Blender.

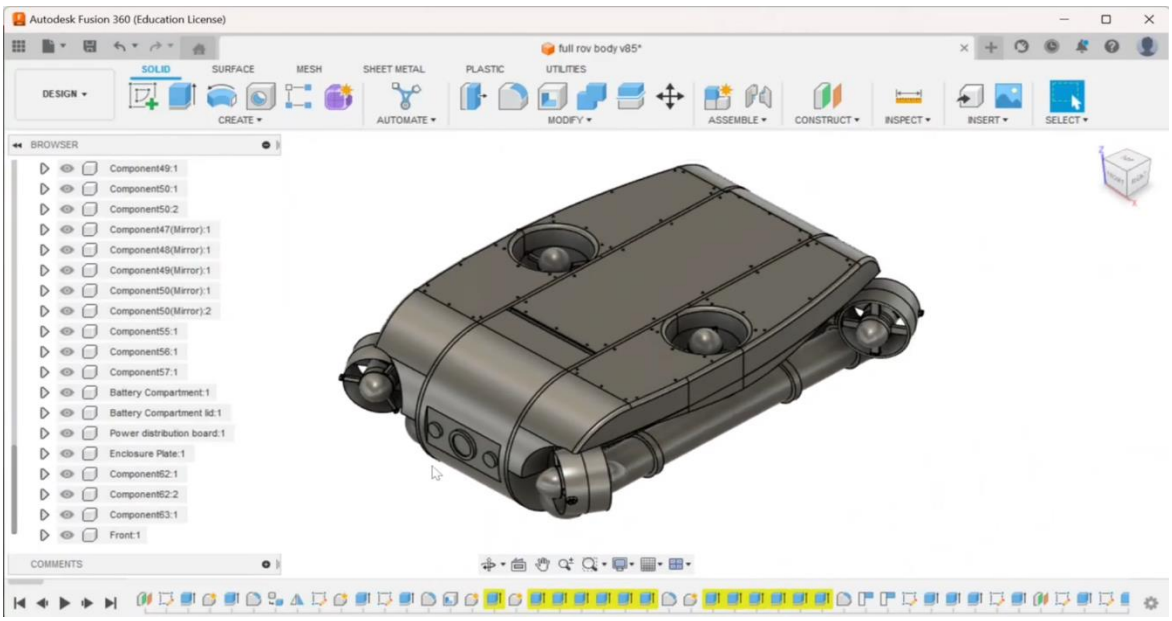

and

underwater robots. It provides a user-friendly interface for mission planning, telemetry monitoring, and manual control.

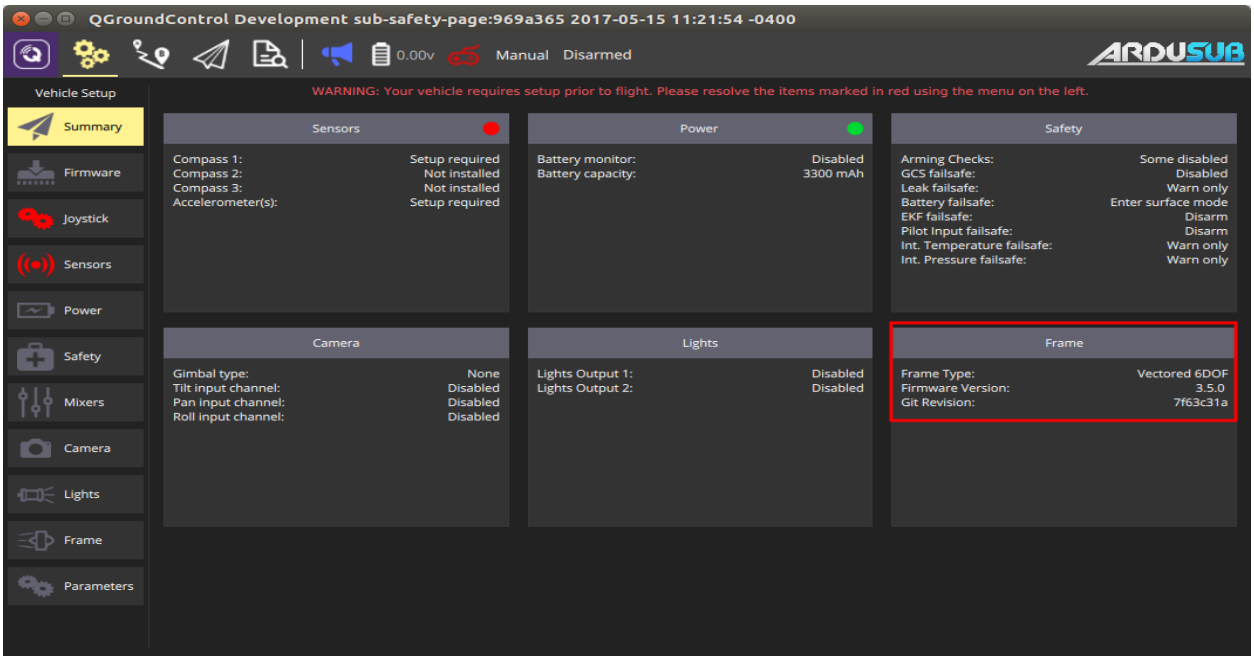

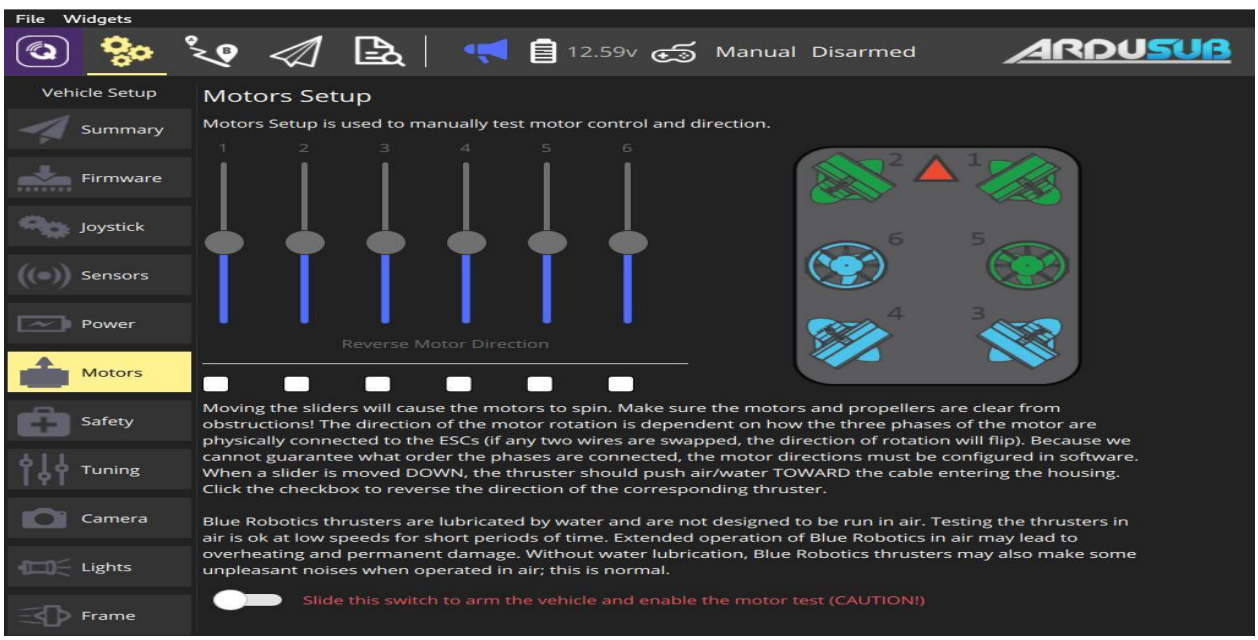

These software tools and platforms provide a comprehensive ecosystem for designing, calibrating, and controlling robots. The selection and utilization of specific software depend on the robot's requirements and the preferences of the robomaking team.

Additional Features in Actual Robo-Making

In addition to the core functionalities and software components mentioned earlier, the actual robomaking process for the Oceanus ROV may involve the incorporation of various additional features to enhance its capabilities and performance. Here are some potential additional features that could be integrated into the Oceanus ROV:

1. **Sensor Integration:** Additional sensors can be integrated into the ROV to gather more data and enable advanced functionalities. For example, depth sensors, temperature sensors, pressure sensors, and water quality sensors can provide valuable environmental data for navigation, monitoring, and scientific research purposes.
2. **Manipulator Arms:** The ROV can be equipped with manipulator arms to perform tasks such as object retrieval, sample collection, or manipulating underwater structures. These arms can be controlled remotely by the operator and enhance the ROV's versatility for various underwater operations.
3. **Advanced Imaging Systems:** Advanced imaging systems, such as high-resolution cameras, sonar systems, or 3D imaging sensors, can be incorporated into the ROV to improve underwater visibility, mapping capabilities, and object detection.
4. **Communication and Data Transmission Upgrades:** Upgrades to the communication system can enhance the range, reliability, and bandwidth for data transmission between the ROV and the operator. This can involve the use of advanced radio communication technologies, underwater acoustic communication systems for remote operation.
5. **Obstacle Avoidance and Collision Detection:** Obstacle avoidance and collision detection systems can be integrated into the ROV to prevent collisions with underwater obstacles or marine life. This can involve the use of proximity sensors, computer vision algorithms, or advanced navigation algorithms to ensure safe and efficient navigation.
6. **Battery Monitoring and Power Management:** Battery monitoring systems can be implemented to monitor the status and health of the ROV's batteries, ensuring optimal power management and preventing power-related issues during operations. This can include voltage and current monitoring, battery capacity estimation, and intelligent power management algorithms.
7. **Enhanced Localization and Mapping:** Integration of advanced localization and mapping techniques can enable accurate positioning, mapping of underwater environments, and tracking of the ROV's movement. This can involve the use of GPS systems, inertial measurement units (IMUs), or simultaneous localization and mapping (SLAM) algorithms.
8. **Autonomous Mission Execution:** Advanced software components and algorithms can be developed to enable autonomous mission execution by the ROV. This can involve predefined mission planning, waypoint navigation, autonomous data collection, or adaptive behavior based on environmental conditions.

9. **Redundancy and Fail-Safe Systems:** Redundancy mechanisms and fail-safe systems can be implemented to ensure the safety and reliability of the ROV. This can include redundant power systems, backup communication systems, and emergency shutdown mechanisms to handle unexpected situations or equipment failures.
10. **Remote Monitoring and Control:** Remote monitoring and control capabilities can be added to the ROV, allowing operators to monitor the ROV's status and control its functions from a remote location. This can involve the use of remote control stations, web-based interfaces, or mobile applications for convenient access and operation.

These additional features can enhance the performance, functionality, and safety of the Oceanus ROV, enabling it to tackle a wide range of underwater tasks and challenges. The integration of these features depends on the specific requirements, budget, and constraints of the robomaking project.

Any Other description not mentioned above

Certainly! Here are some additional aspects of the robomaking process that may require

Description:

1. **Assembly and Integration:** The robomaking process involves the assembly and integration of various hardware and mechanical components. This includes connecting electronic modules, mounting sensors, securing mechanical parts, and ensuring proper alignment and fitment of all components. Attention to detail and precision are crucial during this phase to ensure the successful integration of all elements.
2. **Power Supply and Management:** Robotic systems require a reliable power supply and effective power management. This involves selecting appropriate batteries, designing power distribution systems, implementing voltage regulators, and ensuring efficient utilization of power to maximize the robot's operating time. Proper power management is critical for the smooth functioning of the robot and preventing unexpected shutdowns.
3. **Calibration and Testing:** Before deployment, it is essential to calibrate and test the robot to verify its functionality, accuracy, and performance. This includes calibrating sensors for accurate data acquisition, testing the movement and control mechanisms, validating the communication systems, and conducting comprehensive system checks to ensure all components are working as intended.
4. **Safety Considerations:** Safety is of paramount importance in robomaking. Adequate safety measures should be implemented to protect both the robot and the operators. This may involve incorporating emergency stop buttons, implementing safety interlocks, and designing physical barriers or protective enclosures to prevent accidental contact with moving parts or exposure to hazardous conditions.
5. **Documentation and User Manuals:** A comprehensive documentation process should accompany the robomaking project. This includes creating user manuals, assembly instructions, wiring diagrams, and detailed documentation of the robot's specifications, operating procedures, maintenance guidelines, and troubleshooting steps. Clear and well-documented information ensures proper understanding and usage of the robot by operators and future developers.
6. **Iterative Development and Improvement:** Robomaking is often an iterative process that involves continuous improvement and refinement. As the robot is tested and operated, valuable feedback and insights are gained, which can be used to identify areas for improvement, address performance issues, and optimize the robot's design and functionality. This iterative approach enables the robot to evolve and become more capable over time.

7. **Collaboration and Teamwork:** Successful robomaking projects require effective collaboration and teamwork among team members. This includes coordinating tasks, sharing knowledge and expertise, leveraging individual strengths, and maintaining open communication channels. Collaboration fosters innovation, accelerates progress, and ensures a successful outcome for the robomaking project.

These additional descriptions cover various aspects that are crucial in the robomaking process, emphasizing important considerations, safety measures, and collaborative efforts that contribute to the overall success of the project.

Deliverables achieved in terms of final objectives for the prototype

Functional Modules

The Oceanus ROV prototype has successfully achieved the following deliverables in terms of its final objectives and functional modules:

1. **Underwater Operation Capability:** The ROV prototype has been designed and built to operate effectively in underwater environments. It is capable of being fully submerged and can operate at a minimum depth of 2 meters, meeting the primary objective of the project.
2. **Three Degrees of Freedom (DOF) Movement:** The ROV has been equipped with a propulsion system comprising six thrusters, enabling it to move with three degrees of freedom. It can navigate in terms of surge (forward/backward), sway (left/right), and heave (up/down), allowing for precise maneuverability and control in underwater scenarios.
3. **Pixhawk Flight Controller Integration:** The ROV utilizes the Pixhawk flight controller, a popular and versatile open-source autopilot system, for controlling its movements and operations. The integration of the Pixhawk flight controller ensures reliable and accurate control of the ROV.
4. **30A Bidirectional ESC and Power Distribution Board:** The ROV incorporates a 30A bidirectional electronic speed controller (ESC) and a power distribution board. These components facilitate the distribution of power to the various electronic modules, ensuring efficient and stable operation of the ROV.
5. **Integration of Connecting Terminals:** Connecting terminals have been integrated into the ROV's electronics setup, providing secure and reliable connections between different components. These terminals enable easy and organized wiring, facilitating maintenance and future upgrades.

In summary, the Oceanus ROV prototype has successfully achieved its final objectives by demonstrating its capability to operate underwater, providing three degrees of freedom movement, integrating the Pixhawk flight controller, incorporating a 30A bidirectional ESC and power distribution board, and utilizing connecting terminals for effective electronics integration. These functional modules collectively contribute to the overall performance and functionality of the prototype, enabling it to navigate underwater environments and carry out various tasks with precision and control.

Photos of Robo-Making

OCEANUS

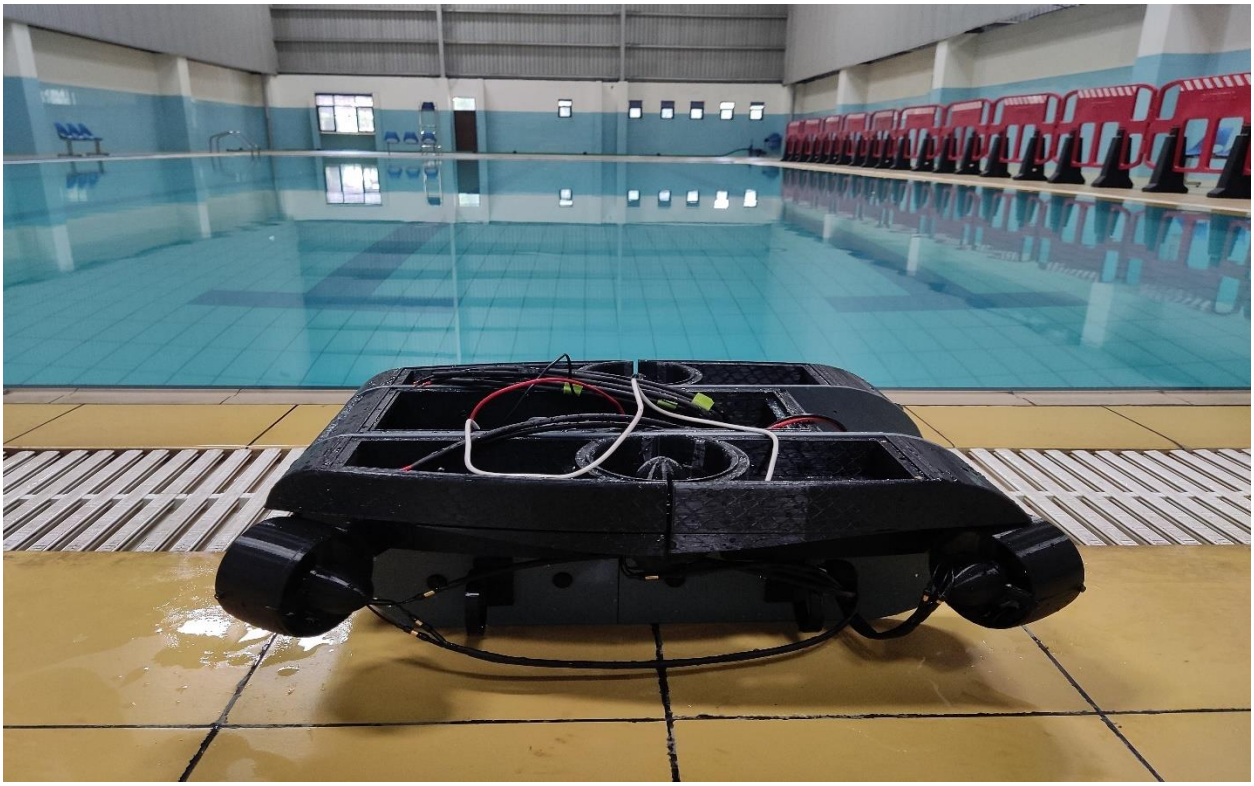

Videos (1GB Limit)

Please find below the link to the Oceanus ROV video. Kindly note that the video is unlisted and private, meaning it is not publicly accessible.

Link: https://tinyurl.com/OCEANUS-Exploring-the-unseen